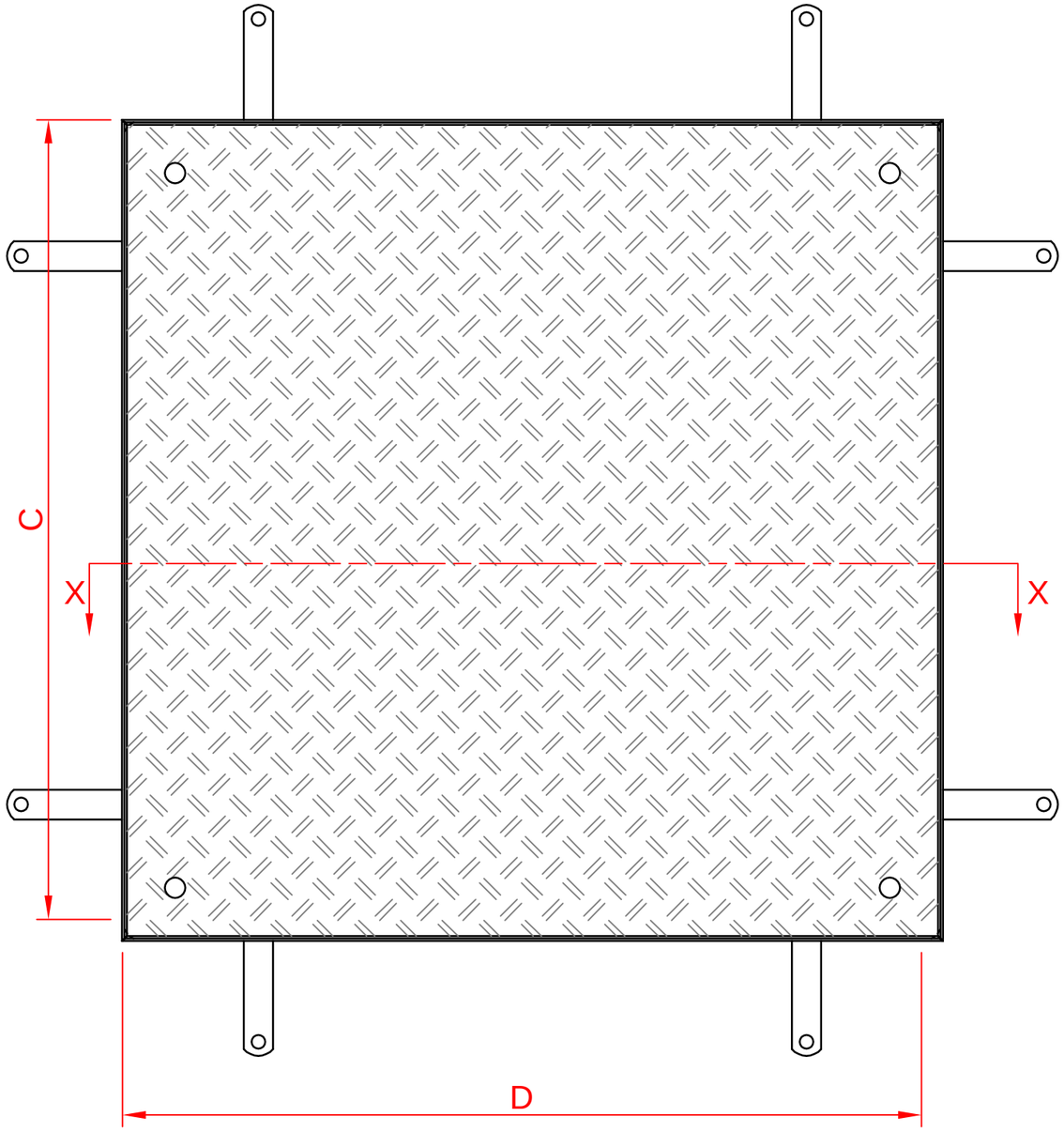

GS Part No.	SS Part No.	Clear Opening (A x B) (mm)	Overall Frame Size (C x D)	Overall Frame Height	Weight (Kg)	FACTA *
403868	403860	300 x 300	396 x 396	60	11.2	AAA
403869	403861	450 x 450	546 x 546	60	18.7	AAA
403870	403862	500 x 500	596 x 596	60	20.8	AAA
408371	403863	600 x 400	696 x 496	60	20.6	AAA
445701	445702	600 x 450	696 x 546	60	21.6	AAA
403912	403909	600 x 600	696 x 696	60	26.9	AAA
403872	403864	635 x 635	731 x 731	60	32.0	AAA
445705	445706	750 x 600	846 x 696	60	34.8	AAA
445709	445710	750 x 750	846 x 846	60	41.5	AAA
403873	403865	800 x 600	896 x 696	60	36.1	AAA
403913	403910	800 x 800	896 x 896	60	44.3	AAA
445713	445714	900 x 600	996 x 696	60	38.7	AAA
445717	445718	900 x 900	996 x 996	60	56.2	AAA
403874	403866	1000 x 600	1096 x 696	60	42.8	AAA
403875	403867	1000 x 800	1096 x 896	60	52.8	AAA
403914	403911	1000 x 1000	1096 x 1096	60	62.4	AAA

* Declared load tested to FACTA class AAA.
**Weights shown are for UniTop GS access covers only.

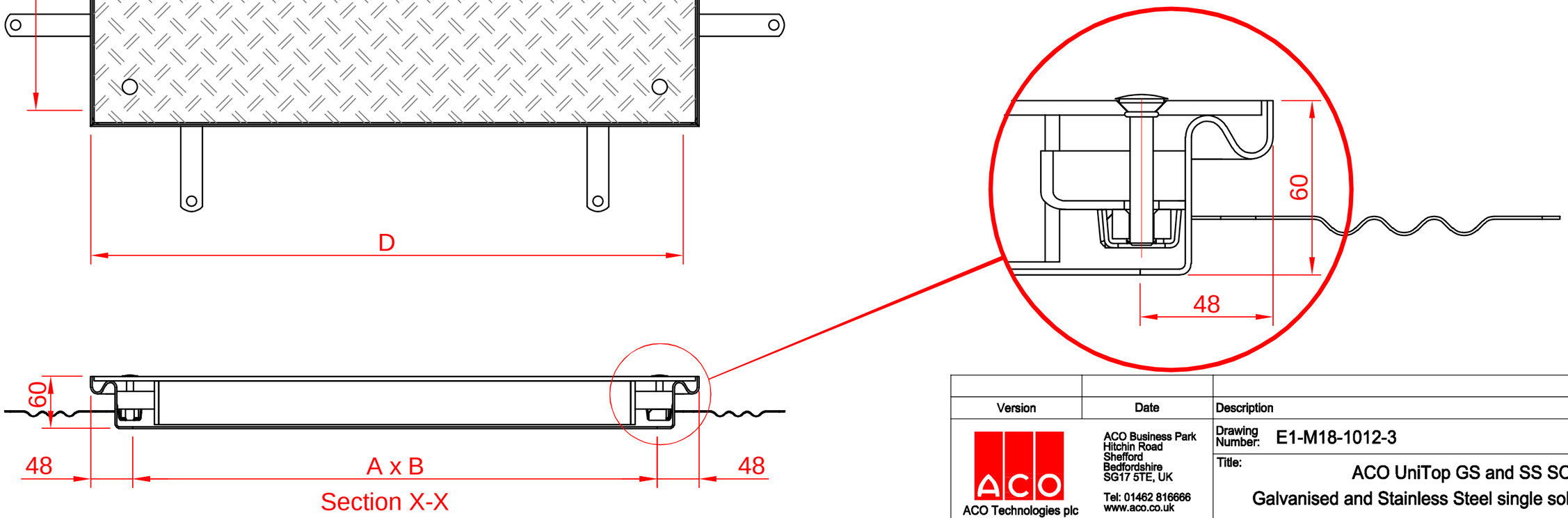

Version	Date	Description	Name
ACO Technologies plc	ACO Business Park Hitchin Road Shefford Bedfordshire SG17 5TE, UK Tel: 01462 816666 www.aco.co.uk	Drawing Number: E1-M18-1012-3	Revision: B
		Title: ACO UniTop GS and SS SOLID Galvanised and Stainless Steel single solid access covers	
Created by: RJE	Released by:	Projection: ISO-A / Units: mm	Format: A3
Created at: 4.9.2017	Released at:		Scale: 1 : 5
Replacement for:	Replaced by:		Sheet: 1 of 1

Information contained in this drawing is copyright property of ACO Technologies plc. Any reproduction in part or whole without written permission of ACO Technologies plc is prohibited