CHANNEL TYPE	PART NUMBER	MATERIAL	LOAD CLASS	STYLE	LENGTH (DIM A)	UPSTAND HEIGHT (DIM B)	WIDTH (DIM C)
M100	23482	GALV	D 400	TWINSLOT OFFSET	500	105	123
	23492	SS	D 400	TWINSLOT OFFSET	500	105	123
	23485	GALV	D 400	TWINSLOT CENTRAL	500	105	123
	23495	SS	D 400	TWINSLOT CENTRAL	500	105	123
	447187	GALV	C 250	TWINSLOT OFFSET	500	105	123
	445940	SS	C 250	TWINSLOT OFFSET	500	105	123
M150	448217	GALV	C 250	TWINSLOT OFFSET	500	105	173
	448220	SS	C 250	TWINSLOT OFFSET	500	105	173
M200	448223	GALV	C 250	TWINSLOT OFFSET	500	105	223
	448226	SS	C 250	TWINSLOT OFFSET	500	105	223

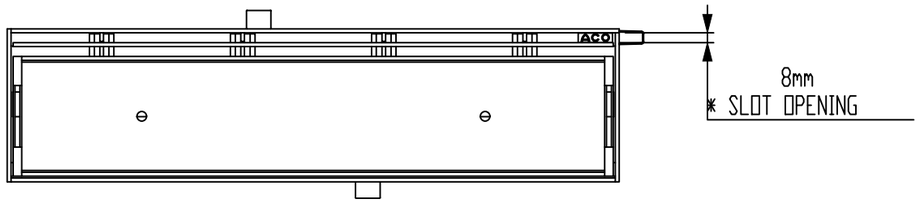

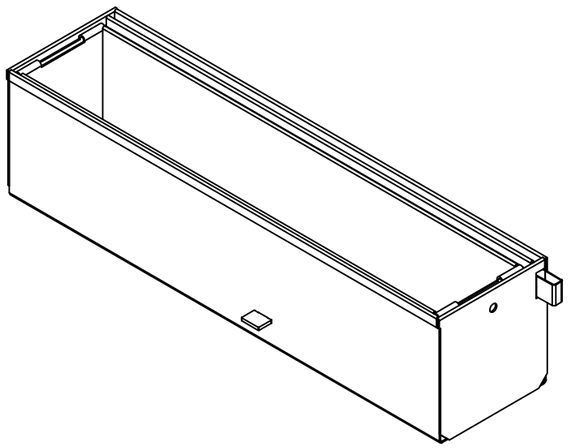

ISOMETRIC VIEW

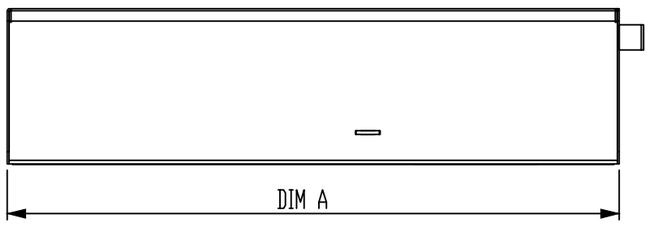

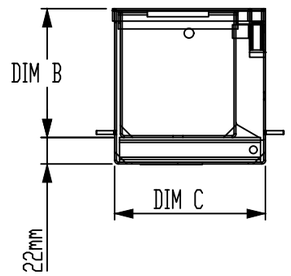

NOTES:
- DIMENSIONS ARE FOR INDICATION ONLY AND MAY VARY DUE TO PART MANUFACTURING TOLERANCES AND INSTALLATION DETAILS
- * CLEAR OPENING

Issue	Date	Description	Created	Approved
1	28/11/2024	INITIAL ISSUE	AQ	LB

ACO Technologies plc
ACO Business Park
Hitchin Road
Shefford
Bedfordshire
SG17 5TE, UK
Tel: 01462 816666
www.aco.co.uk

Drawing Number: E1-M01-770-1

Part Number: SEE TABLE

Title: MULTIDRAIN BRICKSLOT TWINSLOT OFFSET/CENTRAL ACCESS

Created by: AQ Created at: 15/11/2024

Projection: ISO-A Units: mm Format: A3 Scale: 1:5

Protection note: DIN ISO 16016

Information contained in this drawing is copyright property of ACO Technologies plc. Any reproduction in part or whole without written permission of ACO Technologies plc is prohibited

Sheet: 1 of 1