CHANNEL TYPE	PART NUMBER	MATERIAL	LOAD CLASS	STYLE	LENGTH (DIM A)	UPSTAND HEIGHT (DIM B)	WIDTH (DIM C)
M100	447768	GALV	C 250	TRIPLESLOT OFFSET	1M	105	123
	447769	GALV	C 250	TRIPLESLOT OFFSET	0.5M	105	123
	445941	SS	C 250	TRIPLESLOT OFFSET	1M	105	123
	445942	SS	C 250	TRIPLESLOT OFFSET	0.5M	105	123
M150	448227	GALV	C 250	TRIPLESLOT OFFSET	1M	105	173
	448228	GALV	C 250	TRIPLESLOT OFFSET	0.5M	105	173
	448230	SS	C 250	TRIPLESLOT OFFSET	1M	105	173
	448231	SS	C 250	TRIPLESLOT OFFSET	0.5M	105	173
M200	448233	GALV	C 250	TRIPLESLOT OFFSET	1M	105	223
	448234	GALV	C 250	TRIPLESLOT OFFSET	0.5M	105	223
	448236	SS	C 250	TRIPLESLOT OFFSET	1M	105	223
	448237	SS	C 250	TRIPLESLOT OFFSET	0.5M	105	223

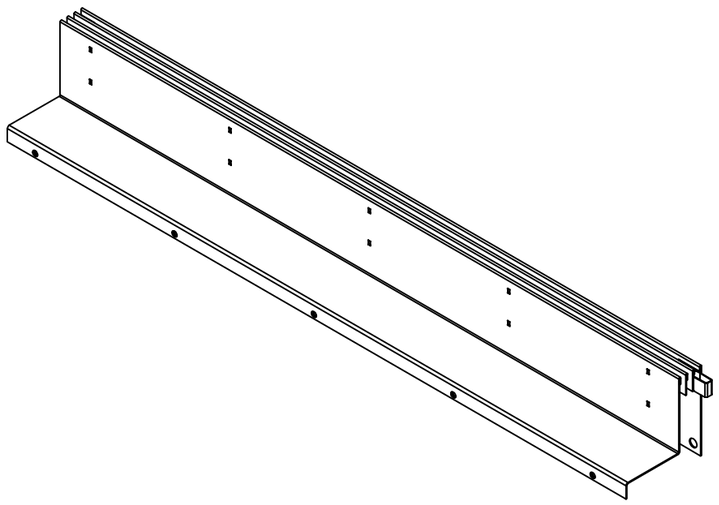

ISOMETRIC VIEW 1:7

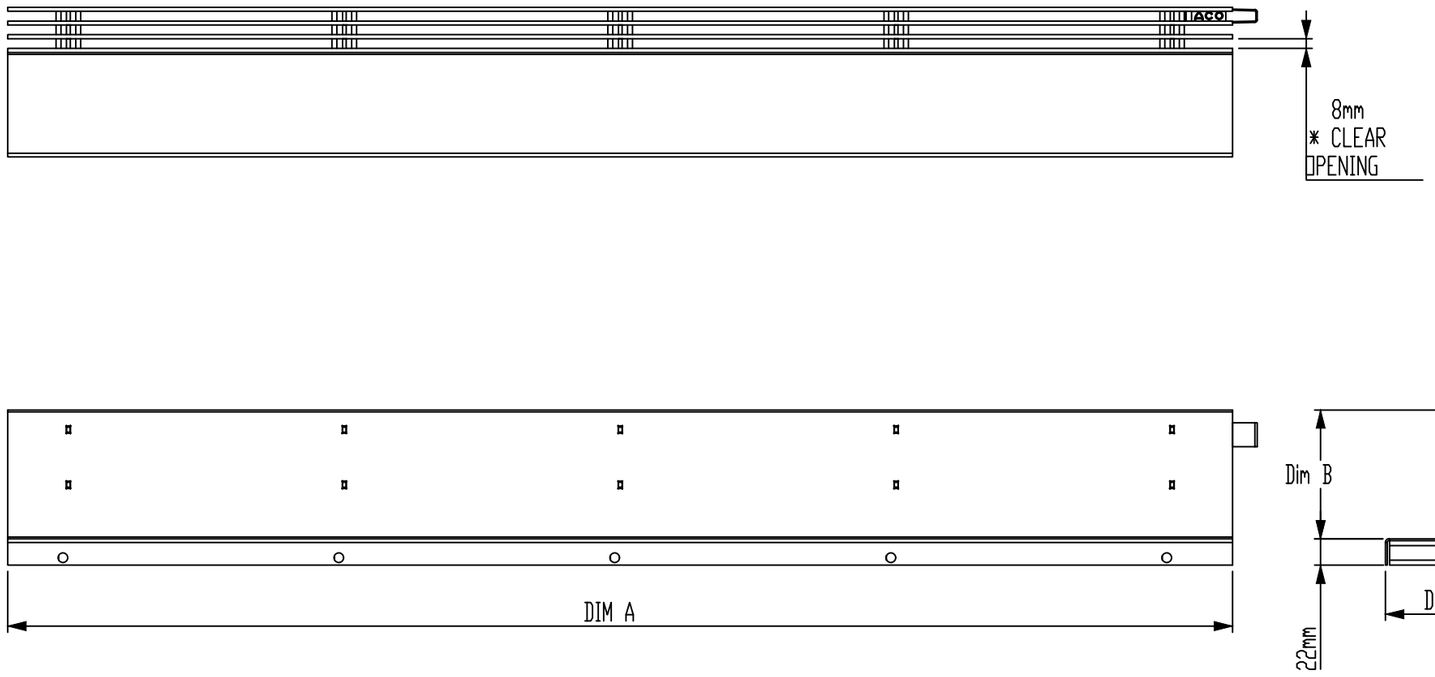

NOTES:
- DIMENSIONS ARE FOR INDICATION ONLY AND MAY VARY DUE TO PART MANUFACTURING TOLERANCES AND INSTALLATION DETAILS
- * CLEAR OPENING

Issue	Date	Description	Created	Approved
1	28/11/2024	INITIAL ISSUE	AQ	LB

ACO Technologies plc
ACO Business Park
Hitchin Road
Shefford
Bedfordshire
SG17 5TE, UK
Tel: 01462 816666
www.aco.co.uk

Drawing Number: E1-M01-771-1
Part Number: SEE TABLE
Title: MULTIDRAIN BRICKSLOT TRIPLESLOT OFFSET

Created by: AQ Created at: 14/11/2024
Projection: ISO-A
Units: mm
Format: A3
Scale: 1:5
Protection note: DIN ISO 16016

Information contained in this drawing is copyright property of ACO Technologies plc. Any reproduction in part or whole without written permission of ACO Technologies plc is prohibited

Sheet: 1 of 1